Rev.	design change reason	Date	Name
Ver 1.0	Release	2016/02/23	Damon

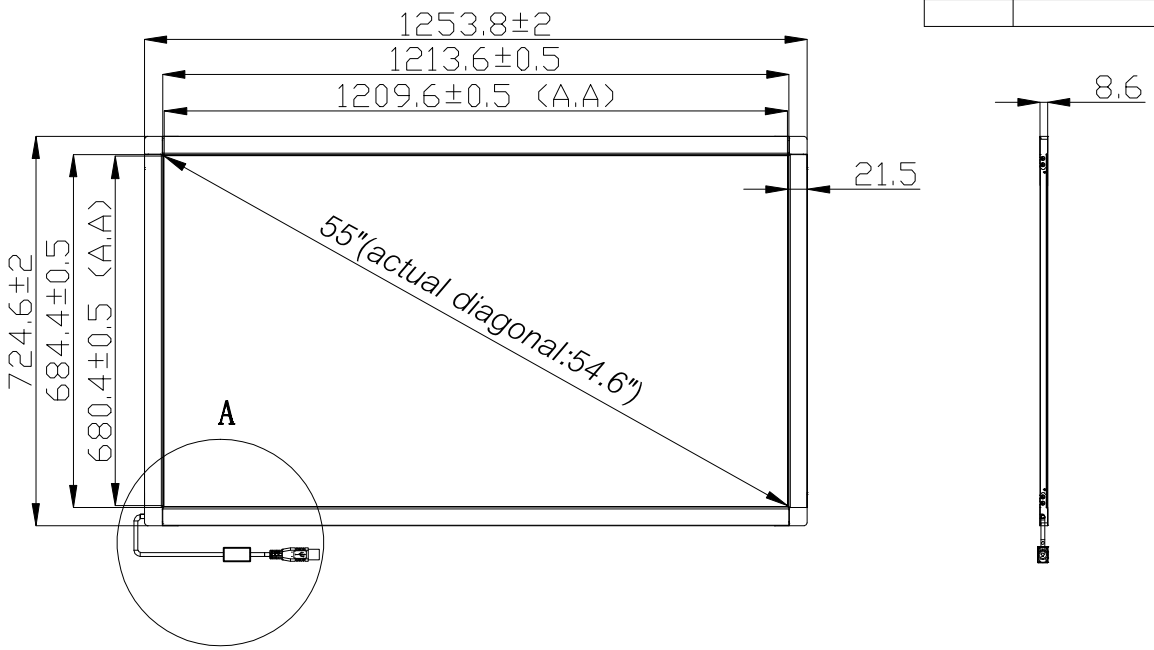

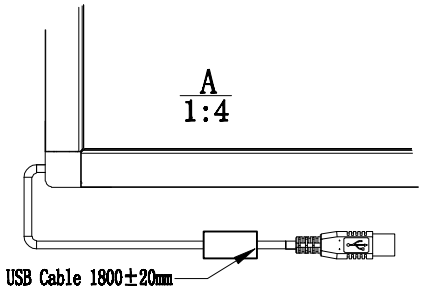

Technical Requirements:

1. Dimensionless Units: mm;
2. Accords with RoHS standard.

Tolerances			Pos.	Object		Material		Mass		Title.
	Grade A	Grade B		Projection		Drawn		Remarks		G6-54.6"Assembly
0 ~ 10(mm)	±0.2	±0.5	Qty.			Check		Scale		
10 ~ 50(mm)	±0.5	±0.8				Drawing frame	A3	Dwg. Nr.		PQ Labs
50 ~ 100(mm)	±1.0	±1.5	Part No.	Type		Date		Nr./sheet.		
100 ~ (mm)	±2.0	±3.0	The information contained herein is confidential and proprietary, and any copying redistribution of the information contained here is strictly prohibited without formal/written permission of PQ Labs Inc							
Angle	1° =±2°									